AA381M FIXED SITE/SHIPBOARD VHF DIRECTION FINDING ANTENNA

- 108 - 250 MHz frequency coverage
- Fixed site or shipboard operation
- Low power consumption
- Weatherized for shipboard use
- One year warranty on parts and labor

A Ruggedized/Weatherized Adcock DF Antenna

The AA381M is an VHF Adcock DF antenna designed for fixed site or shipboard installation with Cubic DF processors or DF receiver/processors. The antenna covers a frequency range of 108 - 250 MHz, has been specially weatherized with vibration-proof elements for shipboard operation (including ice breakers), and can withstand extreme temperature conditions and ice loading such as those encountered above the Arctic Circle.

The AA381M is a 4-element dipole Adcock array with internal pre-amplifiers and array processing. With its exceptional signal-handling capability, the AA381M isespecially well suited for operating in urban or other areas where large numbers of strong signals may be encountered.

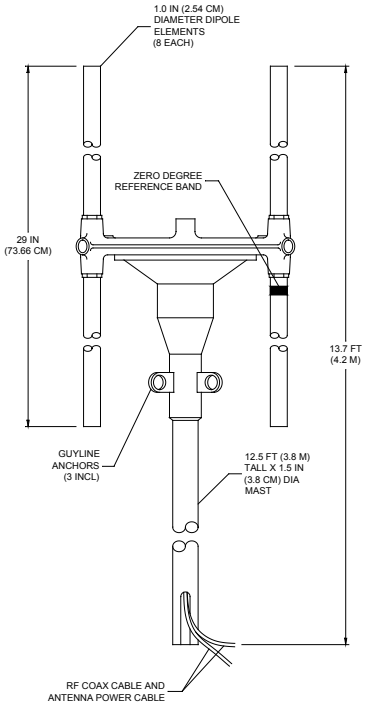

CUBIC DEFENSE APPLICATIONS, INC.

An ISO 9001:2000 Certified Company

AA381M FIXED SITE/SHIPBOARD VHF DIRECTION FINDING ANTENNA

SPECIFICATIONS

Frequency Range:	108 - 250 MHz
Azimuthal coverage:	360°
Antenna:	4-element dipole Adcock array
Bearing Accuracy:	2.5° rms typical/4.0° rms maximum (Note 1) (Note 3)
Power:	Voltage: 11 - 24 VDC (supplied by DF processor) Current: 60 mA
Typical DF Sensitivity:	120 MHz: 10.0 µV/M 160 MHz: 3.0 µV/M 250 MHz 6.0 µV/M (Note 2)
Output Impedance:	50 ohms nominal
Polarization:	Vertical
Mechanical:	
Antenna System:	Height: 13.7' (4.2 m) with Lightning Rod 14.7' (4.5 m) (Note 4)
Antenna:	Height: 29" (73.7 cm) Width: 12.4" (31.5 cm) Length: 12.4" (31.5 cm) Weight: 10 lbs (4.5 kg)
Mast and Bell Housing:	Height: 12.5' (3.8 m) Diameter:1.5" (3.8 cm) Weight: 11 lbs (5.0 kg)
Environmental:	Operating: -40°C to +60°C Storage: 40°C to +70°C Humidity: 95% RH per MIL-STD-810D (507.2)

Note 1: DF bearing accuracy is measured on an ideal site with no bias over 360° azimuth and full frequency range with specified polarization at 0° elevation. Bearing accuracy improvement will depend on the physical characteristics of the particular site chosen. Actual production acceptance testing performed at Cubic test site using standard deviation to eliminate site bias.

Note 2: System sensitivity is specified for an incident field strength in microvolts per meter for direction finding processor output with 6° standard deviation bearing jetter, minimum integration time of 200 msec andan IF bandwidth of 6 kHz.

Note 3: DF bearing accuracy is the rms value of all frequencies at all azimuth points as a single calculation.

Note 4: The lightning rod is not an add on option to the AA381M (P/N: 380-421-5). To order the antenna with the lightning rod a different configuration is required. Order AA381MLR (P/N: 0243-1000-8)

$$RMS = \sqrt{\frac{\sum_{i=1}^{n} (AM_i - AT_i)^2}{n}}$$

i = index
n = # of points (frequency•azimuth)
AM = measured azimuth
AT = true azimuth

Ordering Information

Model No.	Part No.	Description
AA381M	380-421-5	Fixed Site Antenna, 108 - 250 MHz, supplied with interconnect cables Color: White
AA381MLR	0253-1000-8	Fixed Site Antenna, 108 - 250 MHz, supplied with interconnect cables and lightning rod. Color: White

Specifications subject to change without notice

Printed in U.S.A. Copyright 10/10

CUBIC DEFENSE APPLICATIONS, INC.
A member of the Cubic Corporation family of companies

9333 Balboa Ave., San Diego, CA 92123
PHONE: 858.505.2024 FAX: 858.505.1593
www.cubic.com